Quadax®

4

OFFSET BUTTERFLY VALVES

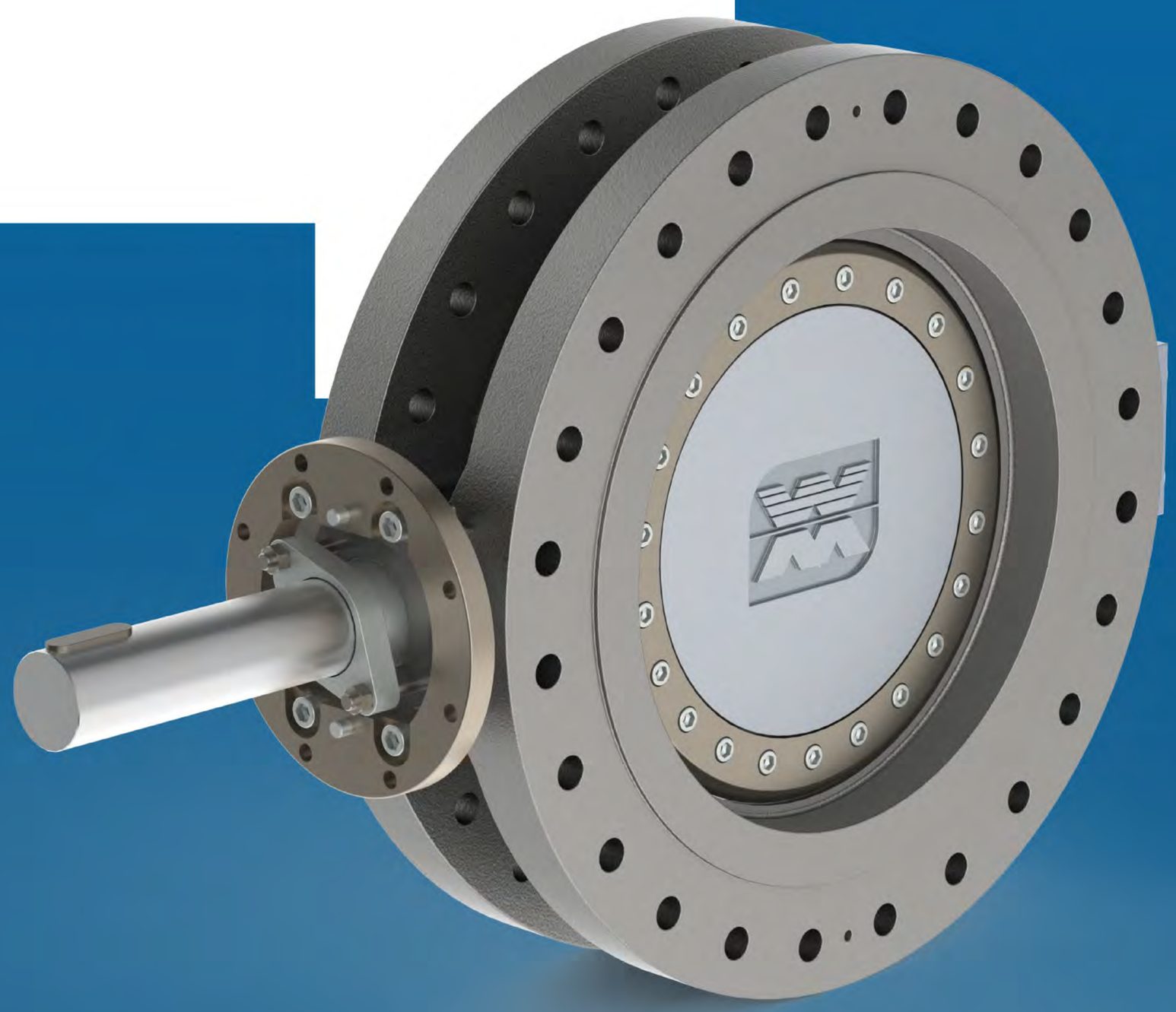

LOW MAINTENANCE
FRICTION FREE
HIGH PERFORMANCE
LONG SERVICE LIFE

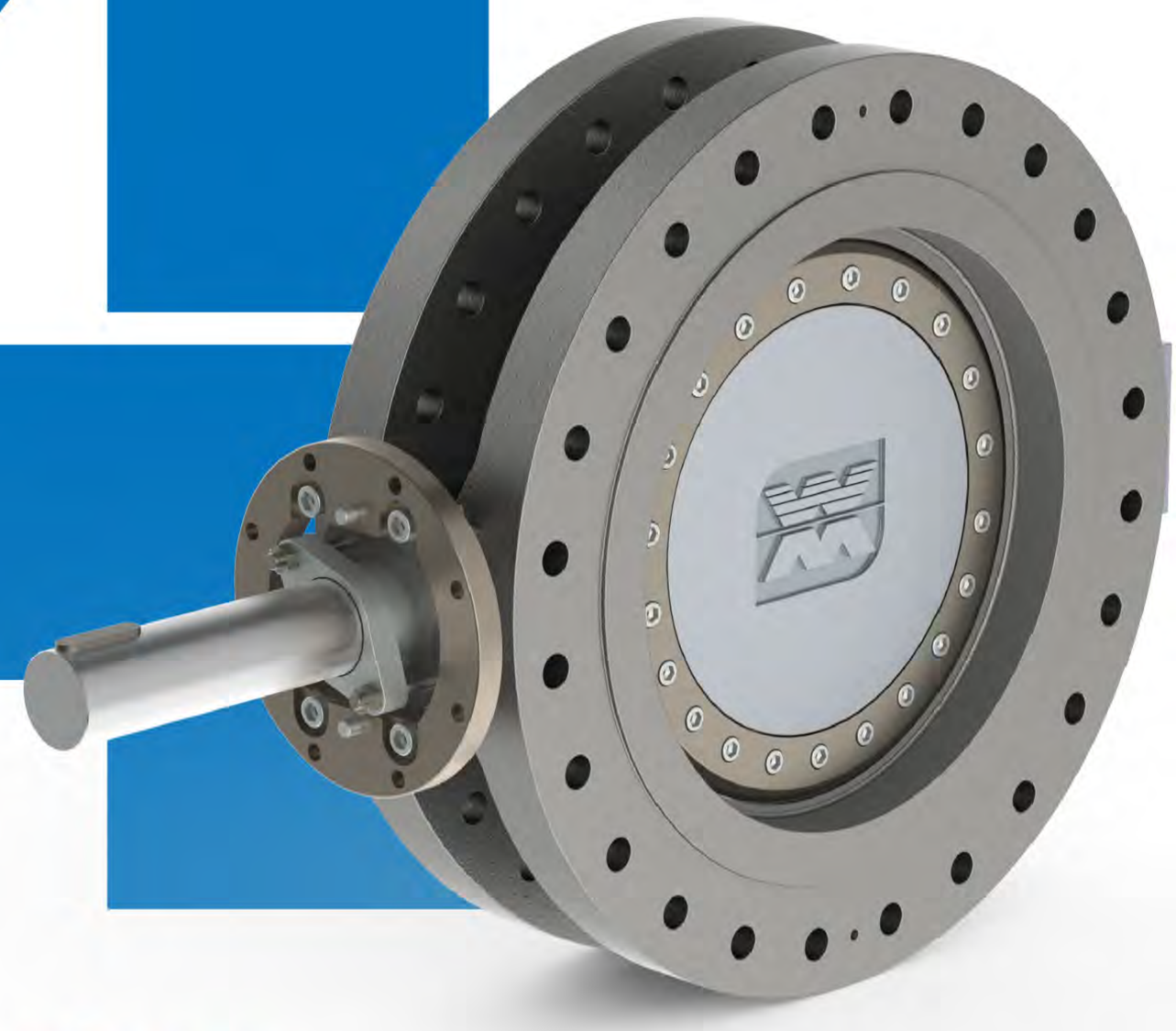

quadax® butterfly valves for maximum efficiency

quadax® valves offer 100% compliance even with the most stringent tightness requirements. The innovative design principle assures that even extreme temperatures of –454°F to +1472°F are easy to handle.

The quadax® butterfly valve is the optimum solution for demanding customers with the highest tightness requirements for even the most extreme applications and temperature ranges.

All quadax® butterfly valves are manufactured to the highest standards and quality materials on a 5-axis machining center at our factory in Germany.

THE DESIGN PRINCIPLE

CENTRIC BUTTERFLY VALVE

The turning point is in the center of the seat and in the center of the pipe.

→ Only elastomer seals are possible.

SINGLE OFFSET BUTTERFLY VALVE

The turning point of the disc is offset along the direction of the pipe.

→ 100% friction between seat and seal

→ Increased torque and wear

DOUBLE OFFSET BUTTERFLY VALVE

The turning point of the disc is also offset from the center of the pipe towards the outer edge.

→ Approx. 30 % friction between seat and seal

TRIPLE OFFSET BUTTERFLY VALVE

The seat has a conical shape. The tip of the cone is offset from the center of the pipe. A circular cone results in an elliptical narrow seat in the valve body.

→ Approx. 2-5 % friction between seat and seal

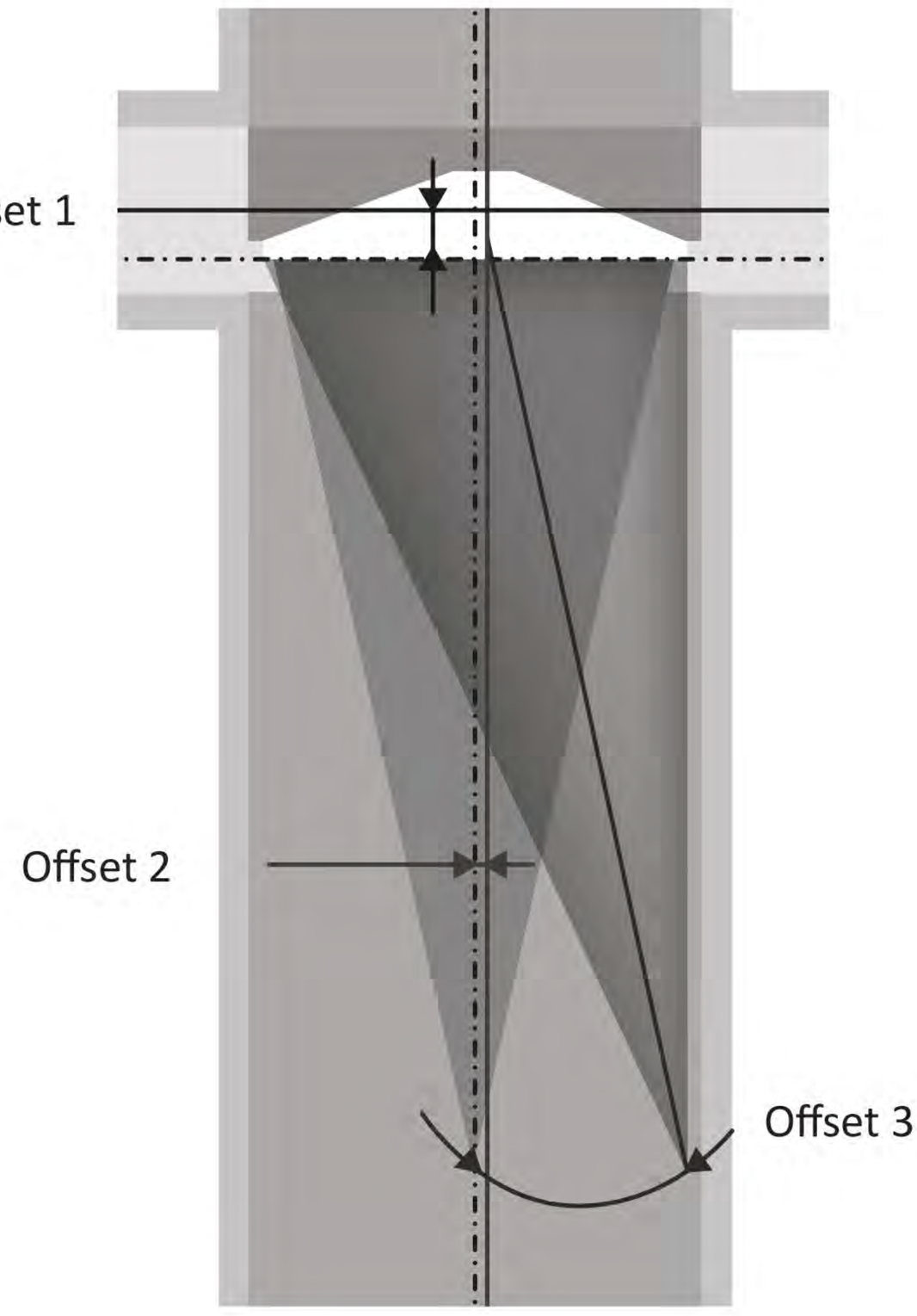

FOUR OFFSET BUTTERFLY VALVE

On the four offset butterfly valve, the shape of the cone is elliptical. The section under a particular angle results in a circular and therefore larger sealing area.

→ Friction free

→ High Cv value

→ Increased tightness (even under extreme conditions)

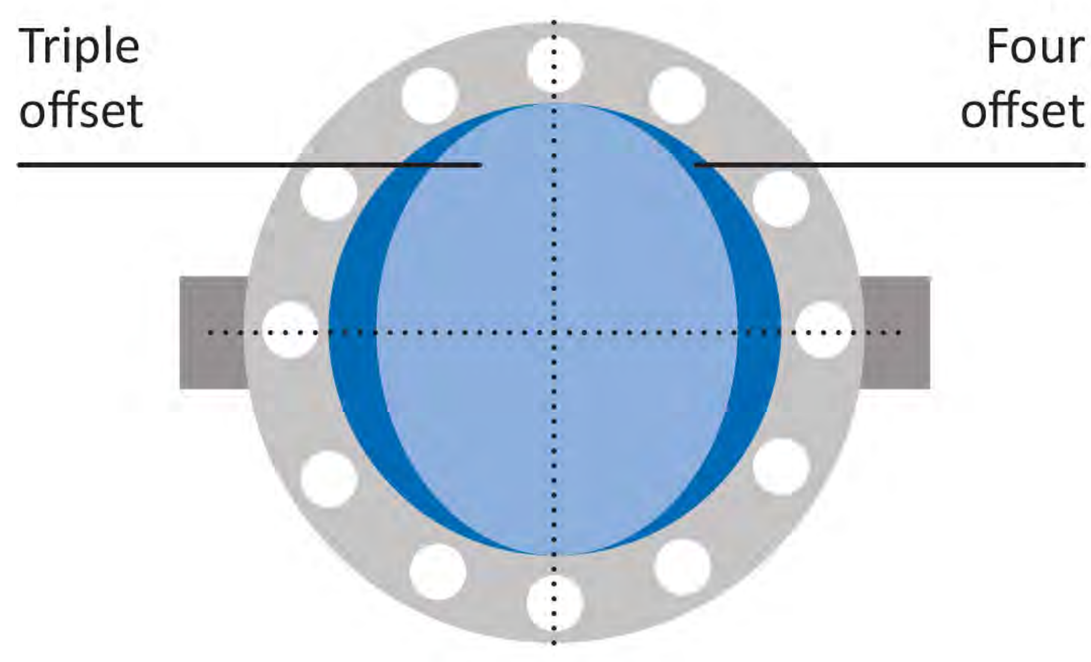

Temperature range from –454°F to +1472°F

Tight in both directions – up to full pressure

Sealed bearings design as an option

Friction free and low torques

New disc design, minimum shaft deflection even at very high pressures

Available up to 2320 psi (higher upon request)

No movement and absolute tightness between disc and seal

ISO top flange for actuation

Zero leakage, even in cryogenic applications

Keyed Shaft and floating disc design

All metal seals possible

Available up to 70" (larger upon request)

Fire safe in both directions

Dead leg area minimized due to four offset design, high Cv value and less accumulation of dirt

ADVANTAGES

Compared to triple offset butterfly valves, the four offset quadax® butterfly valve reduces process costs while simultaneously increasing process reliability.

With quadax® you are choosing a combination of premium performance and maximum value.

In contrast to the elliptical seal geometry of conventional triple offset butterfly valves, the quadax® valve features a entirely circular seal geometry.

EXTREME TEMPERATURE RANGES

Even wall thickness

Extreme temperatures from –454°F to +1472°F

High temperature differences are easy to handle

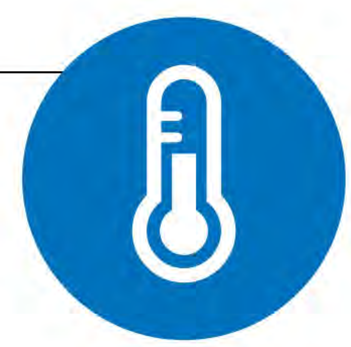

INCREASED OPERATION SAFETY

Friction free

Reduced risk of failure

No wear on sealing area

Longer service life

SUPERIOR TIGHTNESS

Highest stringent requirements

Bubble tight even in cryogenic applications

Innovative and patented sealing design

REDUCED OPERATING COSTS

High Cv values

Lower nominal pipe diameters

Low torques

Reduced maintenance costs

SEALS

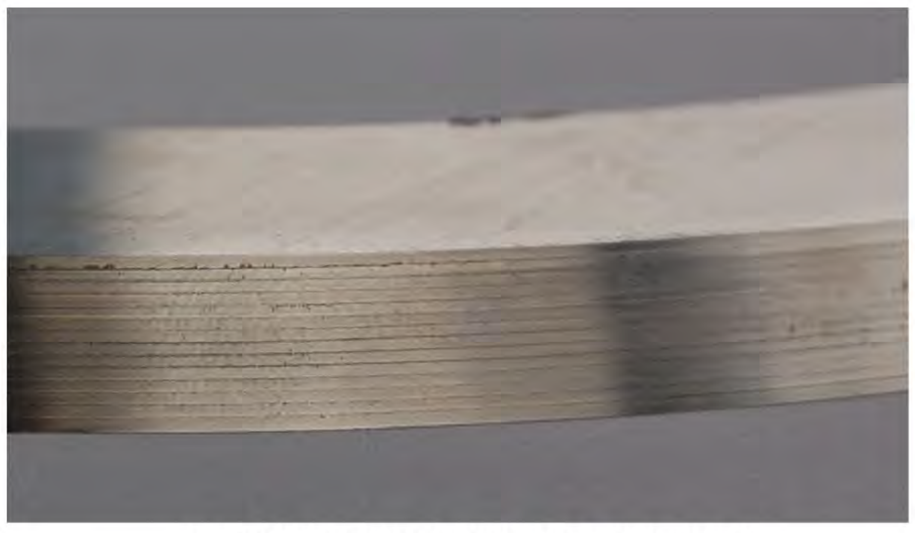

LAMINATED STAINLESS STEEL

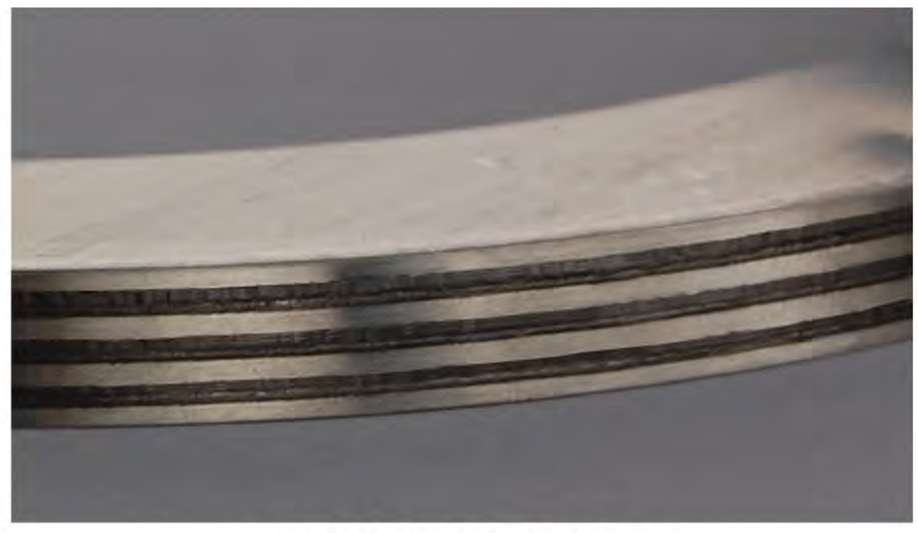

LAMINATED GRAPHITE

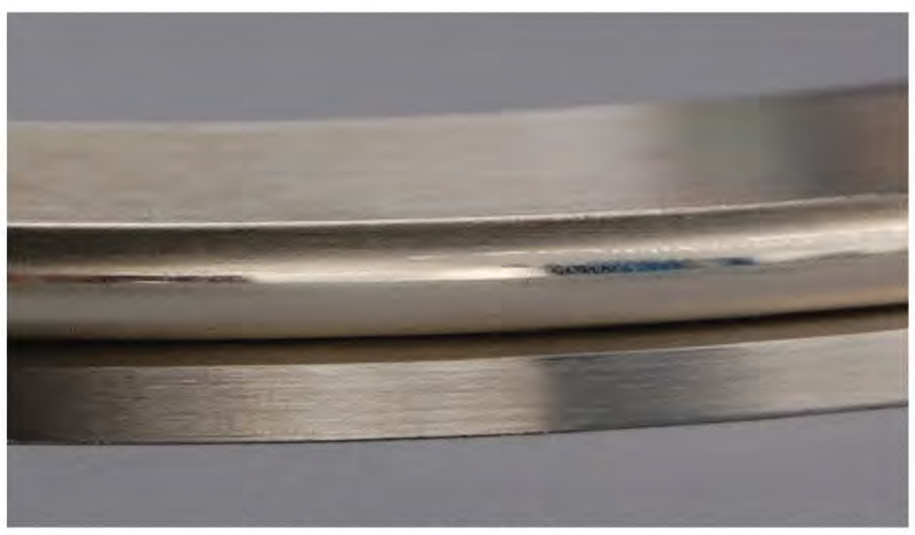

INCONEL O-RING

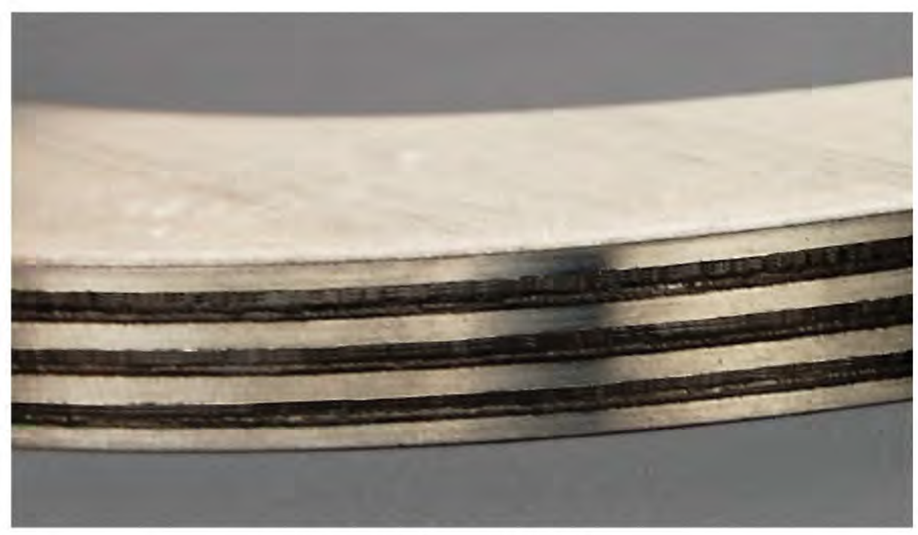

INCONEL GRAPHITE

STANDARDS

2014/68 EU PRESSURE EQUIPMENT DIRECTIVE

DIN EN 12516 (DIN 3840)

ANSI B 16.34

AD 2000

AD W 10

BAM OXYGEN APPROVAL

TECHNICAL INSTRUCTIONS ON AIR QUALITY (TA LUFT II) ISO 15848

NACE MR 0175, NACE MR 0103

2014/34/EU ATEX

LEAK RATE 1

IN COMPLIANCE WITH DIN 3230 BA / BO / BN TEST

LEAK RATE A

IN COMPLIANCE WITH DIN EN 12266

TIGHTNESS EXCEEDS BS 6364

FIRE SAFE IN BOTH DIRECTIONS

IN COMPLIANCE WITH ISO10497, API 607, BS 6755

SIL 3

CRN

APPLICATIONS

Thanks to its unique design, four offset construction and state of the art manufacturing technology, quadax® meets the most stringent tightness requirements, even in extreme pressure and temperature ranges. This makes quadax® butterfly valves ideal for use in the oil and gas industry, petrochemicals, cryogenics, refineries, LNG + LPG systems and many other applications.

TYPICAL MEDIA

LNG + LPG
WASTE GASES
STEAM
TECHNICAL GASES
OXYGEN
CHEMICAL PROCESS MEDIA
CRYOGENIC MEDIA
SEAWATER

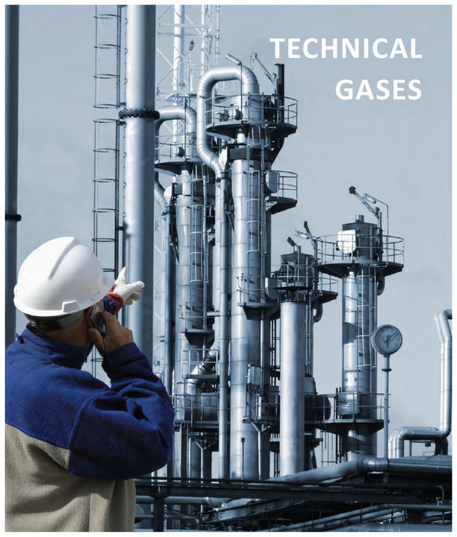

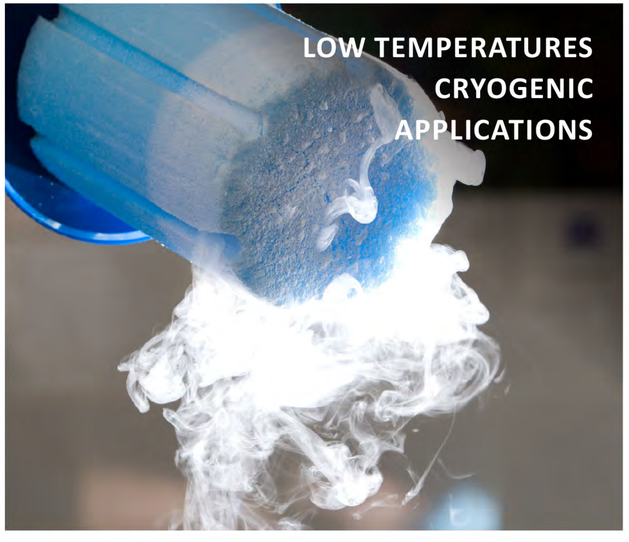

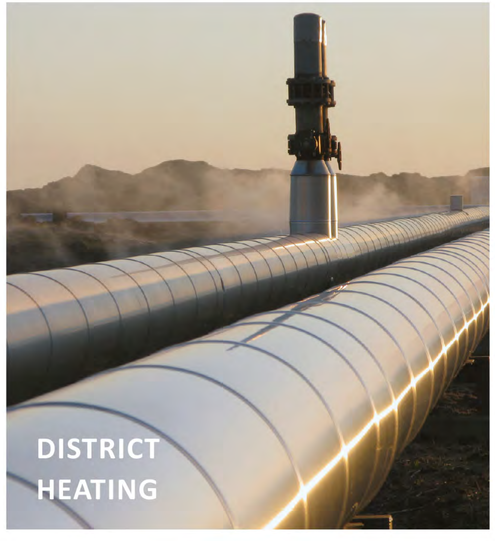

quadax® butterfly valve - Double Flange Version

body details

butterfly valve:	bare shaft
pressure range:	0-2320 psi
nominal size:	2"-70"
connection:	flange
body materials:	carbon steel, stainless steel, special material (duplex, inconel, bronze)
valve seat materials:	inconel, others on request
seal materials:	stainless steel with or without laminated graphite, inconel, PTFE

The body materials listed above are in contact with the media.

details needed

- size
- pipe connection
- operating pressure
- flow rate
- Δp
- closing time
- media
- process temperature
- ambient temperature

The valves' technical design is based on media and application requirements. This can lead to deviations from the general specifications shown on the data sheet with regards to the design, sealing materials and characteristics.

If order or application specifications are incomplete or imprecise there is the potential for an incorrect technical design of the valve for the required application. As a consequence, the physical and / or chemical properties of the materials or seals used, may not be suitable for the intended application.

general specifications

ports	flange	
		ANSI 150 / 300 / 600 / 900
function		depending upon actuator
pressure range	body pressure	0 to 2320 psi
	Δp standard shaft	754 psi in both directions
	Δp optional shaft	1450 psi in both directions
Cv value	gal/min	see table
leakage rate		zero-leakage per API 6D and API 598 resilient in both direction; fire-safe per API 607 6th edition
flow direction		indicated by arrow on body of valve
switching time		depending upon actuator
temperature range	standard	+14°F to +842°F
	with special materials	-454°F to +1472°F
limit switches		depending upon actuator
approvals		PED / Fire safe / BAM / TA Luft / ATEX
weight	lbs	see table
additional equipment		upon request

Cv-curve

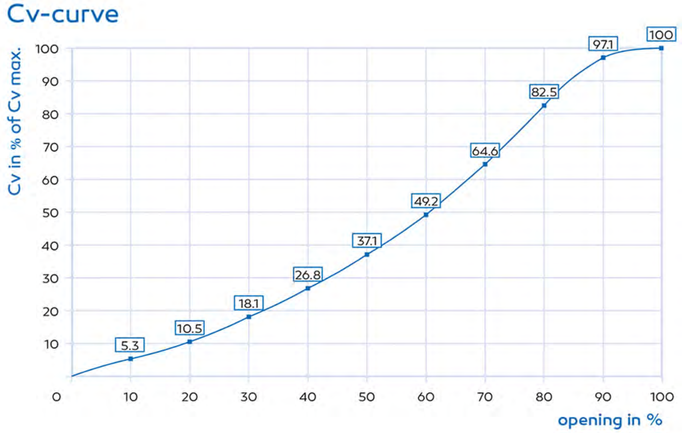

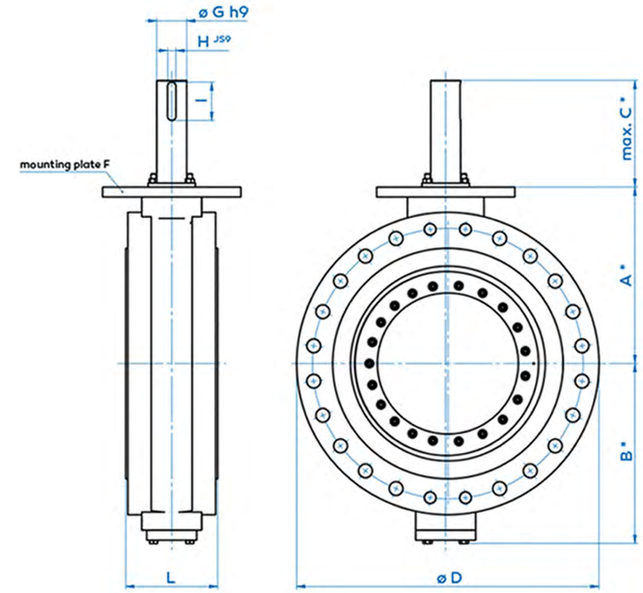

* dimensions for trim X only

Dimensions

size	(inch)		2	2½	3	4	5	6	8	10	12	14	16	18	20	24	28	30	32	36	40
pipe cl to mounting plate		A	4.13	5.04	5.04	6.38	7.48	7.99	9.45	10.98	12.01	12.80	15.16	15.94	17.32	20.87	24.80	24.80	27.56	32.68	36.22
pipe cl to cover screws		B	4.17	5.08	5.08	6.22	7.32	8.03	9.49	11.06	12.09	13.11	15.08	15.87	17.36	21.30	25.31	25.31	28.07	32.91	36.46
bare shaft length for direct mounting		C	3.74	3.74	3.74	4.92	5.31	5.71	7.09	7.09	7.09	11.02	11.38	11.81	12.60	12.60	14.45	14.45	14.45	15.67	15.67
bare shaft length for adapter		C	2.01	2.01	2.01	2.68	2.68	2.68	3.35	3.35	3.35	6.81	6.69	6.69	6.69	6.69	8.27	-	-	-	-
flange diameter	ANSI 150	D	6.50	7.48	7.48	9.06	-	11.02	13.86	15.94	19.09	21.65	23.23	25.20	27.56	32.09	36.50	38.74	42.72	45.98	50.79
	ANSI 300	D	6.50	8.27	8.27	10.00	-	12.60	14.96	17.52	20.28	23.03	25.98	27.95	30.31	35.75	40.75	42.99	45.24	50.00	48.74
	ANSI 600	D	6.50	8.27	8.27	10.83	-	13.98	16.54	20.00	22.05	23.82	26.97	29.33	32.09	37.01	42.24	44.49	47.01	51.77	51.97
	ANSI 900	D	-	9.45	9.45	11.50	-	14.96	18.50	21.46	24.02	25.20	27.76	31.10	33.86	40.94	46.06	48.43	51.77	57.48	59.45
mounting plate F ISO 5211	(others on request)	F	F07	F07	F07	F10	F12	F14	F16	F16	F16	F25	F30	F30	F35	F35	F40	F40	F40	F48	F48
trim A	290 psi max.	G	-	-	-	-	-	-	-	-	1.57	1.77	1.97	2.17	2.17	2.76	3.54	3.54	3.94	4.33	4.72
		H	-	-	-	-	-	-	-	-	0.47	0.55	0.55	0.63	0.63	0.79	0.98	0.98	1.10	1.26	1.26
		I	-	-	-	-	-	-	-	-	1.77	2.36	2.36	3.15	3.15	3.54	4.53	4.53	4.92	5.51	6.30
trim X (standard)	754 psi max.	G	0.55	0.71	0.71	0.79	0.87	1.26	1.26	1.57	1.77	2.17	2.56	2.76	2.95	3.54	4.33	4.33	5.12	5.91	6.30
		H	0.20	0.24	0.24	0.24	0.24	0.39	0.39	0.47	0.55	0.63	0.71	0.79	0.79	0.98	1.26	1.26	1.26	1.42	1.57
		I	0.98	1.10	1.10	1.10	1.57	1.57	1.57	1.77	2.36	3.15	3.46	3.54	3.54	4.53	5.51	5.51	7.09	7.09	7.87
trim B	1500 psi max.	G	-	-	-	-	-	-	1.77	2.17	2.56	2.95	3.54	3.74	4.33	5.12	5.91	5.91	7.09	7.48	8.66
		H	-	-	-	-	-	-	0.55	0.63	0.71	0.79	0.98	0.98	1.26	1.26	1.42	1.42	1.77	1.77	1.97
		I	-	-	-	-	-	-	2.36	3.15	3.46	3.54	115	4.92	5.51	7.09	7.09	7.09	8.66	9.84	11.02
trim C	2250 psi max.	G	-	0.79	0.79	1.10	1.26	1.57	1.97	2.56	2.95	3.54	4.33	4.33	5.12	5.91	6.69	6.69	7.87	9.06	9.84
		H	-	0.24	0.24	0.31	0.39	0.47	0.55	0.71	0.79	0.98	1.26	1.26	1.26	1.42	1.57	1.57	1.77	1.97	2.20
		I	-	1.10	1.10	1.57	1.57	1.77	2.36	3.46	3.54	4.53	5.51	5.51	7.09	7.09	7.87	7.87	9.45	11.02	12.60
ISO 5752 R13 / DIN 3202 F16	ANSI 150/300	L	4.25	4.49	4.49	5.00	-	5.51	5.98	6.50	7.01	7.48	8.50	8.74	9.02	10.51	11.50	12.52	12.52	12.99	16.14
ISO 5752 R14 / DIN 3202 F4	ANSI 600/900	L	5.91	7.09	7.09	7.48	7.87	8.27	9.06	9.84	10.63	11.42	12.20	12.99	13.78	15.35	16.93	18.50	18.50	20.08	21.65
Cv-value (gal/min) trim A	Δp max. 290 psi		-	-	-	-	-	-	-	-	4462	6370	9237	12483	15024	24013	29620	37978	42003	55308	65269
Cv-value (gal/min) trim X	Δp max. 754 psi		44	137	137	300	486	760	1680	2850	4314	5953	8513	11612	14091	22387	26838	31702	38771	50250	59765
Cv-value (gal/min) trim B	Δp max. 1500 psi		-	-	-	-	-	-	1458	2469	3698	5185	7305	10160	11913	19137	23053	25914	33293	45295	51679
Cv-value (gal/min) trim C	Δp max. 2250 psi		-	117	117	242	400	670	1353	2228	3402	4607	6580	9290	10979	17444	21199	24658	31138	40341	47523
weight (standard)	(approx. lbs)		24	40	40	60	84	97	172	245	353	518	736	769	1049	1623	1900	2242	2509	3252	4766

quadax® butterfly valve - Lug Type Version

body details

butterfly valve:	bare shaft
pressure range:	0-913 psi
nominal size:	2"-70"
connection:	flange
body materials:	carbon steel, stainless steel, special material (duplex, inconel, bronze)
valve seat materials:	inconel, others on request
seal materials:	stainless steel with or without laminated graphite, inconel, PTFE

The body materials listed above are in contact with the media.

details needed

- size
- pipe connection
- operating pressure
- flow rate
- Δp
- closing time
- media
- process temperature
- ambient temperature

The valves' technical design is based on media and application requirements. This can lead to deviations from the general specifications shown on the data sheet with regards to the design, sealing materials and characteristics.

If order or application specifications are incomplete or imprecise there is the potential for an incorrect technical design of the valve for the required application. As a consequence, the physical and / or chemical properties of the materials or seals used, may not be suitable for the intended application.

general specifications

ports	flange	
		ANSI 150 / 300 / 600
function		depending upon actuator
pressure range	body pressure	0 to 913 psi
	Δp standard shaft	754 psi in both directions
Cv value	gal/min	see table
leakage rate		zero-leakage per API 6D and API 598 resilient in both direction; fire-safe per API 607 6th edition
flow direction		indicated by arrow on body of valve
switching time		depending upon actuator
process- and outside temperature	standard	+14°F to +842°F
	with special materials	-454°F to +1472°F
limit switches		depending upon actuator
approvals		PED / Fire safe / BAM / TA Luft / ATEX
weight	lbs	see table
additional equipment		upon request

Cv-curve

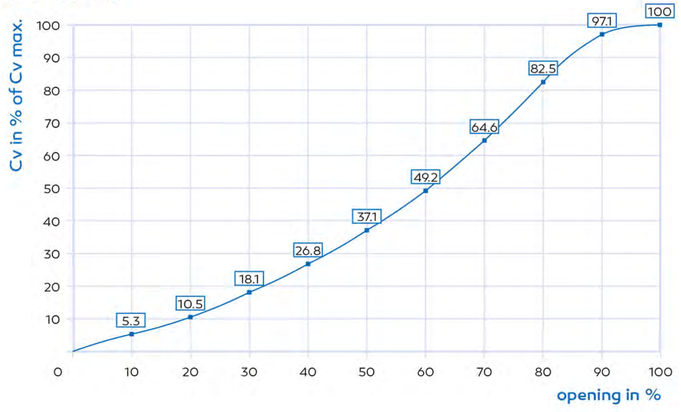

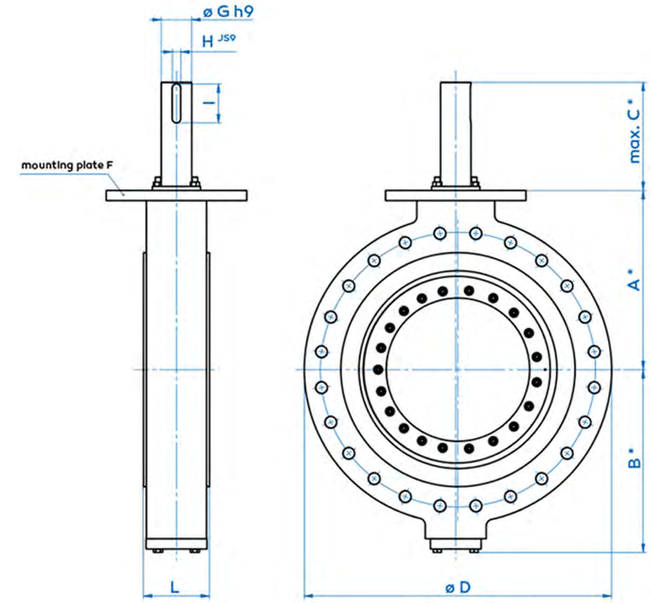

* dimensions for trim X only

Dimensions

size	(inch)		2	2½	3	4	5	6	8	10	12	14	16	18	20	24	28	30	32	36	40
pipe cl to mounting plate		A	4.13	5.04	5.04	6.38	7.48	7.99	9.45	10.98	12.01	12.80	15.16	15.94	17.32	20.87	24.80	24.80	27.56	32.68	36.22
pipe cl to cover screws		B	4.17	5.08	5.08	6.22	7.32	8.03	9.49	11.06	12.09	13.11	15.08	15.87	17.36	21.30	25.31	25.31	28.07	32.91	36.46
bare shaft length for direct mounting		C	3.74	3.74	3.74	4.92	5.31	5.71	7.09	7.09	7.09	11.02	11.38	11.81	12.60	12.60	14.45	14.45	14.45	15.67	15.67
bare shaft length for adapter		C	2.01	2.01	2.01	2.68	2.68	2.68	3.35	3.35	3.35	6.81	6.69	6.69	6.69	6.69	8.27	-	-	-	-
flange diameter	ANSI 150	D	6.50	7.48	7.48	9.06	-	11.02	13.86	15.94	19.09	21.65	23.23	25.20	27.56	32.09	36.50	38.74	42.72	45.98	50.79
	ANSI 300	D	6.50	8.27	8.27	10.00	-	12.60	14.96	17.52	20.28	23.03	25.98	27.95	30.31	35.75	40.75	42.99	45.24	50	48.74
	ANSI 600	D	6.50	8.27	8.27	10.83	-	13.98	16.54	20	22.05	23.82	26.97	29.33	32.09	37.01	42.24	44.49	47.01	51.77	51.97
mounting plate F ISO 5211	(others on request)	F	F07	F70	F07	F10	F12	F14	F16	F16	F16	F25	F30	F30	F35	F35	F40	F40	F40	F48	F48
trim A	290 psi max.	G	-	-	-	-	-	-	-	-	1.57	1.77	1.97	2.17	2.17	2.76	3.54	3.54	3.94	4.33	4.72
		H	-	-	-	-	-	-	-	-	0.47	0.55	0.55	0.63	0.63	0.79	0.98	0.98	1.10	1.26	1.26
		I	-	-	-	-	-	-	-	-	1.77	2.36	2.36	3.15	3.15	3.54	4.53	4.53	4.92	5.51	6.30
trim X (standard)	754 psi max.	G	0.55	0.55	0.71	0.79	0.87	1.26	1.26	1.57	1.77	2.17	2.56	2.76	2.95	3.54	4.33	4.33	5.12	5.91	6.30
		H	0.20	0.22	0.24	0.24	0.24	0.39	0.39	0.47	0.55	0.63	0.71	0.79	0.79	0.98	1.26	1.26	1.26	1.42	1.57
		I	0.98	1.10	1.10	1.10	1.57	1.57	1.57	1.77	2.36	3.15	3.46	3.54	3.54	4.53	5.51	5.51	7.09	7.09	7.87
API 609	ANSI 150	L	1.69	1.69	1.89	2.13	-	2.24	2.52	2.80	3.19	3.62	4.02	4.49	5.50	6.06	-	-	-	-	-
	ANSI 300	L	1.69	1.69	1.89	2.13	-	2.32	2.87	3.27	3.62	4.61	5.24	5.87	6.26	7.13	-	-	-	-	-
	ANSI 600	L	1.69	2.13	2.13	2.52	-	3.07	4.02	4.61	5.51	6.10	7.01	7.87	8.50	9.13	-	-	-	-	-
Cv-value (gal/min)	trim A	Δp max. 290 psi	-	-	-	-	-	-	-	-	4462	6370	9237	12483	15024	24013	29620	37978	42003	55308	65269
	trim X	Δp max. 754 psi	44	137	137	300	486	760	1680	2850	4314	5953	8513	11612	14091	22387	26838	31702	38771	50250	59765
weight (standard)		(approx. lbs)	18	35	35	49	71	86	150	282	331	487	703	769	1008	1576	2242	2652	2945	3845	5439

quadax® butterfly valve - Buttweld Version

body details

butterfly valve:	bare shaft
pressure range:	0-2320 psi
nominal size:	3"-40"
connection:	buttweld ends
body materials:	carbon steel, stainless steel, special material (duplex, inconel)
valve seat materials:	inconel, others on request
seal materials:	stainless steel with or without laminated graphite, inconel, PTFE

The body materials listed above are in contact with the media.

details needed

- size
- pipe connection
- operating pressure
- flow rate
- Δp
- closing time
- media
- process temperature
- ambient temperature

The valves' technical design is based on media and application requirements. This can lead to deviations from the general specifications shown on the data sheet with regards to the design, sealing materials and characteristics.

If order or application specifications are incomplete or imprecise there is the potential for an incorrect technical design of the valve for the required application. As a consequence, the physical and / or chemical properties of the materials or seals used, may not be suitable for the intended application.

general specifications

ports	buttweld ends	
function		depending upon actuator
pressure range	body pressure	0 to 2320 psi
	Δp standard shaft	754 psi in both directions
	Δp optional shaft	1450 psi in both directions
Cv value	gal/min	see table
leakage rate		zero-leakage per API 6D and API 598 resilient in both direction; fire-safe per API 607 6th edition
flow direction		indicated by arrow on body of valve
switching time		depending upon actuator
temperature range	standard	+14°F to +842°F
	with special materials	-454°F to +1452°F
limit switches		depending upon actuator
approvals		PED / Fire safe / BAM / TA Luft / ATEX
weight	lbs	see table
additional equipment		upon request

Cv-curve

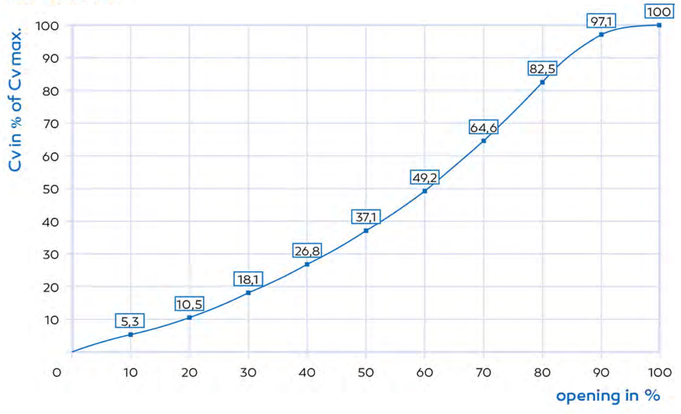

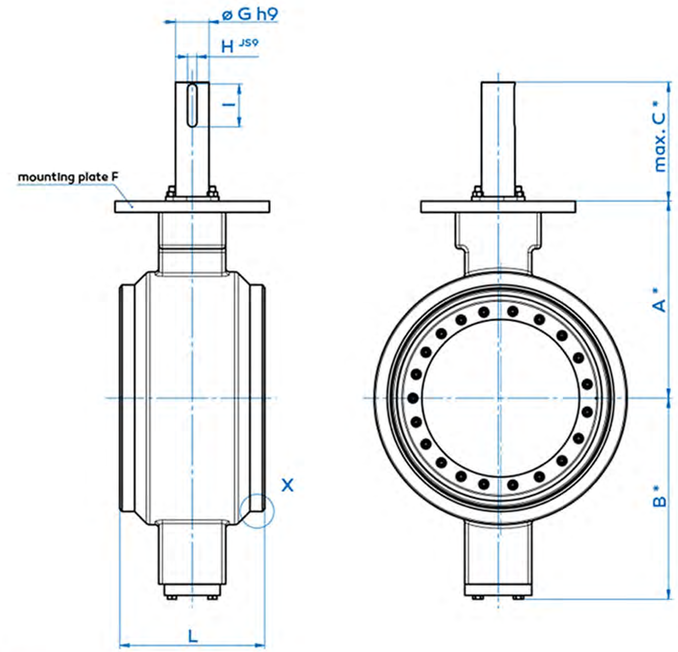

buttweld ends
customer-specified

Dimensions

* dimensions for trim X only

size		(inch)		3	4	5	6	8	10	12	14	16	18	20	24	28	30	32	36	40
pipe cl to mounting plate			A	5.04	6.38	7.48	7.99	9.45	10.98	12.01	12.80	15.16	15.94	17.32	20.87	24.80	24.80	27.56	32.68	36.22
pipe cl to cover screws			B	5.08	6.22	7.32	8.03	9.49	11.06	12.09	13.11	15.08	15.87	17.36	21.30	25.31	25.31	28.07	32.91	36.46
bare shaft length for direct mounting			C	3.74	4.92	5.31	5.71	7.09	7.09	7.09	11.02	11.38	11.81	12.60	12.60	14.45	14.45	14.45	15.67	15.67
bare shaft length for adapter			C	2.01	2.68	2.68	2.68	3.35	3.35	3.35	6.81	6.69	6.69	6.69	6.69	8.27	-	-	-	-
mounting plate F ISO 5211		(others on request)	F	F07	F10	F12	F14	F16	F16	F16	F25	F30	F30	F35	F35	F40	F40	F40	F48	F48
trim A		290 psi max.	G	-	-	-	-	-	-	1.57	1.77	1.97	2.17	2.17	2.76	3.54	3.54	3.94	4.33	4.72
			H	-	-	-	-	-	-	0.47	0.55	0.55	0.63	0.63	0.79	0.98	0.98	1.10	1.26	1.26
			I	-	-	-	-	-	-	1.77	2.36	2.36	3.15	3.15	3.54	4.53	4.53	4.92	5.51	6.30
trim X (standard)		754 psi max.	G	0.71	0.79	0.87	1.26	1.26	1.57	1.77	2.17	2.56	2.76	2.95	3.54	4.33	4.33	5.12	5.91	6.30
			H	0.24	0.24	0.24	0.39	0.39	0.47	0.55	0.63	0.71	0.79	0.79	0.98	1.26	1.26	1.26	1.42	1.57
			I	1.10	1.10	1.57	1.57	1.57	1.77	2.36	3.15	3.46	3.54	3.54	4.53	5.51	5.51	7.09	7.09	7.87
trim B		1500 psi max.	G	-	-	-	-	1.77	2.17	2.56	2.95	3.54	3.74	4.33	5.12	5.91	5.91	7.09	7.48	8.66
			H	-	-	-	-	0.55	0.63	0.71	0.79	0.98	0.98	1.26	1.26	1.42	1.42	1.77	1.77	1.97
			I	-	-	-	-	2.36	3.15	3.46	3.54	115	4.92	5.51	7.09	7.09	7.09	8.66	9.84	11.02
trim C		2250 psi max.	G	0.79	1.10	1.26	1.57	1.97	2.56	2.95	3.54	4.33	4.33	5.12	5.91	6.69	6.69	7.87	9.06	9.84
			H	0.24	0.31	0.39	0.47	0.55	0.71	0.79	0.98	1.26	1.26	1.26	1.42	1.57	1.57	1.77	1.97	2.20
			I	1.10	1.57	1.57	1.77	2.36	3.46	3.54	4.53	5.51	5.51	7.09	7.09	7.87	7.87	9.45	11.02	12.60
DIN 3202 F4			L	7.09	7.48	7.87	8.27	9.06	9.84	10.63	11.42	12.20	12.99	13.78	15.35	16.93	18.50	18.50	20.08	21.65
Cv-value (gal/min)	trim A	Δp max. 290 psi		-	-	-	-	-	-	4462	6370	9237	12483	15024	24013	29620	37978	42003	55308	65269
	trim X	Δp max. 754 psi		137	300	486	760	1680	2850	4314	5953	8513	11612	14091	22387	26838	31702	38771	50250	59765
	trim B	Δp max. 1500 psi		-	-	-	-	1458	2469	3698	5185	7305	10160	11913	19137	23053	25914	33293	45295	51679
	trim C	Δp max. 2250 psi		117	242	400	670	1353	2228	3402	4607	6580	9290	10979	17444	21199	24658	31138	40341	47523
weight (standard)		(approx. lbs)		31	33	46	60	130	71	157	317	467	584	710	996	1239	1592	1786	2011	2227

quadax® butterfly valve - Gate Valve Replacement

body details

butterfly valve:	bare shaft
pressure range:	0-1450 psi
nominal size:	3"-40"
connection:	flange
body materials:	carbon steel, stainless steel, special material (duplex, inconel, bronze)
valve seat materials:	inconel, others on request
seal materials:	stainless steel with or without laminated graphite, inconel, PTFE

The body materials listed above are in contact with the media.

details needed

- size
- pipe connection
- operating pressure
- flow rate
- Δp
- closing time
- media
- process temperature
- ambient temperature

The valves' technical design is based on media and application requirements. This can lead to deviations from the general specifications shown on the data sheet with regards to the design, sealing materials and characteristics.

If order or application specifications are incomplete or imprecise there is the potential for an incorrect technical design of the valve for the required application. As a consequence, the physical and / or chemical properties of the materials or seals used, may not be suitable for the intended application.

general specifications

ports	flange	
		ANSI 150 / 300 / 600 / 900
function		depending upon actuator
pressure range	body pressure	0 to 1450 psi
	Δp standard shaft	754 psi in both directions
	Δp optional shaft	1450 psi in both directions
Cv value	gal/min	see table
leakage rate		zero-leakage per API 6D and API 598 resilient in both direction; fire-safe per API 607 6th edition
flow direction		indicated by arrow on body of valve
switching time		depending upon actuator
temperature range	standard	+14°F to +842°F
	with special materials	-454°F to +1472°F
limit switches		depending upon actuator
approvals		PED / Fire safe / BAM / TA Luft / ATEX
weight	lbs	see table
additional equipment		upon request

Cv-curve

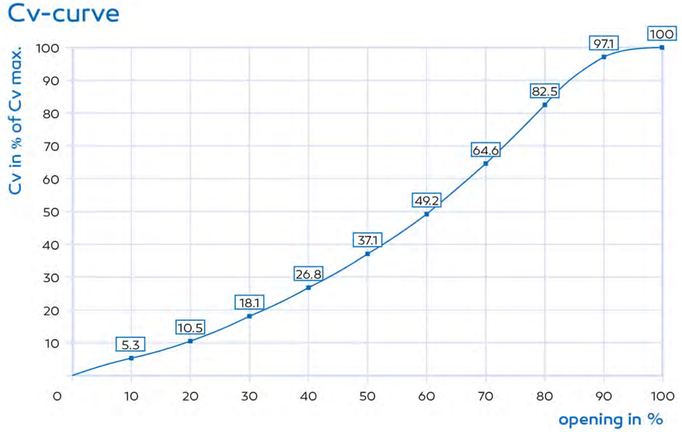

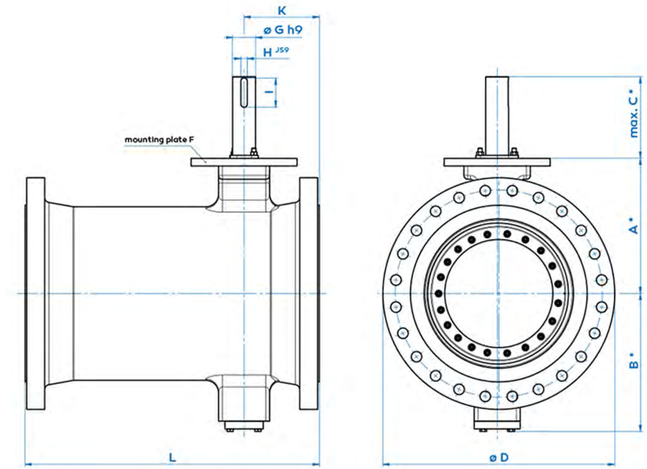

* dimensions for trim X only

Dimensions

(per ANSI B16.10)

size	(inch)		3	4	5	6	8	10	12	14	16	18	20	24	28	30	32	36	40
pipe cl to mounting plate		A	5.04	6.38	7.48	7.99	9.45	10.98	12.01	12.80	15.16	15.94	17.32	20.87	24.80	24.80	27.56	32.68	36.22
pipe cl to cover screws		B	5.08	6.22	7.32	8.03	9.49	11.06	12.09	13.11	15.08	15.87	17.36	21.30	25.31	25.31	28.07	32.91	36.46
bare shaft length for direct mounting		C	3.74	4.92	5.31	5.71	7.09	7.09	7.09	11.02	11.38	11.81	12.60	12.60	14.45	14.45	14.45	15.67	15.67
bare shaft length for adapter		C	2.01	2.68	2.68	2.68	3.35	3.35	3.35	6.81	6.69	6.69	6.69	6.69	8.27	-	-	-	-
flange diameter	ANSI 150	D	7.48	9.06	-	11.02	13.86	15.94	19.09	21.65	23.23	25.20	27.56	32.09	36.50	38.74	42.72	45.98	50.79
	ANSI 300	D	8.27	10.00	-	12.60	14.96	17.52	20.28	23.03	25.98	27.95	30.31	35.75	40.75	42.99	45.24	50	48.74
	ANSI 600	D	8.27	10.83	-	13.98	16.54	20	22.05	23.82	26.97	29.33	32.09	37.01	42.24	44.09	47.01	51.77	51.97
mounting plate F ISO 5211	(others on request)	F	F07	F10	F12	F14	F16	F16	F16	F25	F30	F30	F35	F35	F40	F40	F40	F48	F48
trim A	290 psi max.	G	-	-	-	-	-	-	1.57	1.77	1.97	2.17	2.17	2.76	3.54	3.54	3.94	4.33	4.72
		H	-	-	-	-	-	-	0.47	0.55	0.55	0.63	0.63	0.79	0.98	0.98	1.10	1.26	1.26
		I	-	-	-	-	-	-	1.77	2.36	2.36	3.15	3.15	3.54	4.53	4.53	4.92	5.51	6.30
trim X (standard)	754 psi max.	G	0.71	0.79	0.87	1.26	1.26	1.57	1.77	2.17	2.56	2.76	2.95	3.54	4.33	4.33	5.12	5.91	6.30
		H	0.24	0.24	0.24	0.39	0.39	0.47	0.55	0.63	0.71	0.79	0.79	0.98	1.26	1.26	1.26	1.42	1.57
		I	1.10	1.10	1.57	1.57	1.57	1.77	2.36	3.15	3.46	3.54	3.54	4.53	5.51	5.51	7.09	7.09	7.87
trim B	1500 psi max.	G	-	-	-	-	1.77	2.17	2.56	2.95	3.54	3.74	4.33	5.12	5.91	5.91	7.09	7.48	8.66
		H	-	-	-	-	0.55	0.63	0.71	0.79	0.98	0.98	1.26	1.26	1.42	1.42	1.77	1.77	1.97
		I	-	-	-	-	2.36	3.15	3.46	3.54	115	4.92	5.51	7.09	7.09	7.09	8.66	9.84	11.02
trim C	2250 psi max.	G	0.79	1.10	1.26	1.57	1.97	2.56	2.95	3.54	4.33	4.33	5.12	5.91	6.69	6.69	7.87	9.06	9.84
		H	0.24	0.31	0.39	0.47	0.55	0.71	0.79	0.98	1.26	1.26	1.26	1.42	1.57	1.57	1.77	1.97	2.20
		I	1.10	1.57	1.57	1.77	2.36	3.46	3.54	4.53	5.51	5.51	7.09	7.09	7.87	7.87	9.45	11.02	12.60
ANSI B 16.10	ANSI 150	K	3.98	4.49	-	4.92	5.28	5.94	6.61	6.93	7.48	8.50	8.98	10.00	12.01	12.01	12.99	13.98	-
		L	7.99	9.02	-	10.51	11.50	12.99	14.02	15.00	15.98	17.01	17.99	20.00	24.02	24.02	25.98	27.99	-
	ANSI 300	K	4.02	4.33	-	4.92	5.28	5.94	6.61	6.93	7.48	8.54	9.45	11.42	13.58	14.76	15.55	17.52	-
		L	11.10	12.01	-	15.87	16.50	17.99	19.76	30.0	32.99	35.98	39.02	45.00	52.99	55.00	60.00	67.99	-
	ANSI 600	K	4.41	4.96	-	6.02	6.50	7.13	7.64	8.15	8.58	9.45	9.88	11.77	13.58	14.76	15.55	17.52	-
		L	14.02	17.01	-	22.01	25.98	30.98	32.99	35.00	39.02	42.99	47.01	55.00	60.98	65.00	70.00	82.01	-
Cv-value (gal/min)	trim A	Δp max. 290 psi		-	-	-	-	-	-	4462	6370	9237	12483	15024	24013	29620	37978	42003	55308	65269
	trim X	Δp max. 754 psi		137	300	486	760	1680	2850	4314	5953	8513	11612	14091	22387	26838	31702	38771	50250	59765
	trim B	Δp max. 1500 psi		-	-	-	-	1458	2469	3698	5185	7305	10160	11913	19137	23053	25914	33293	45295	51679
	trim C	Δp max. 2250 psi		117	242	400	670	1353	2228	3402	4607	6580	9290	10979	17444	21199	24658	31138	40341	47523
weight (standard)		(approx. lbs)		49	66	93	115	203	260	432	633	833	1089	1327	1814	2081	2385	2734	3263	3549

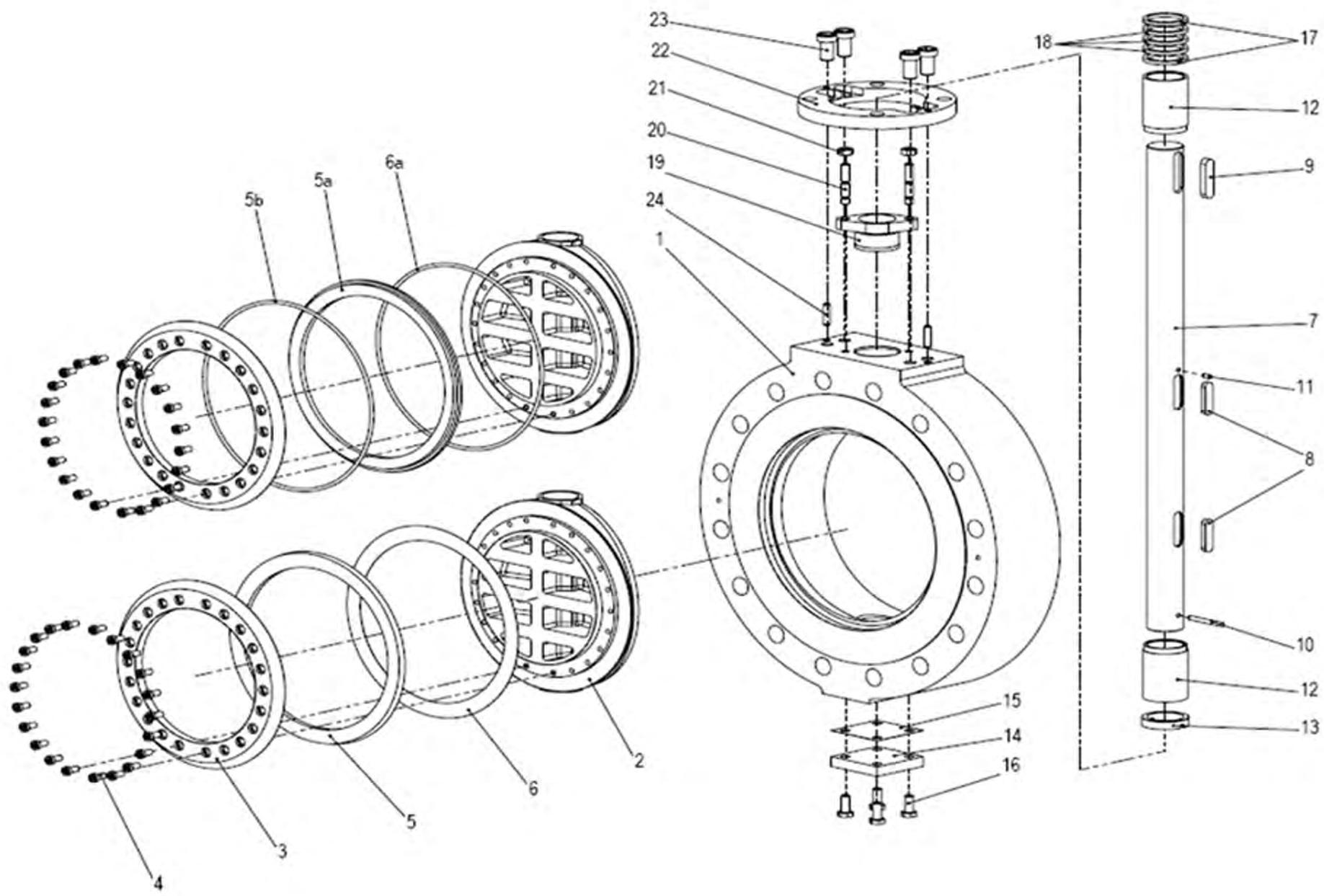

pos	part	carbon steel design	stainless steel design
1	body	A 216 WCB	AISI 316
2	disc	A 216 WCB	AISI 316
3	clamp ring	A 285 Gr C nickel plated	AISI 316Ti
4	cylinder heat screw	A2-70	A2-70
5	disc seal	pure graphite	pure graphite
6	seal	AISI 316Ti/pure graphite	AISI 316Ti/pure graphite
7	shaft	AISI 431	AISI 431
8	key	AISI 316Ti	AISI 316Ti
9	key	AISI 316Ti	AISI 316Ti
10	dowel pin	AISI 316Ti	AISI 316Ti
11	dowel pin	AISI 316Ti	AISI 316Ti
12	bearing	AISI 304L chrome plated	AISI 304L chrome plated
13	retaining ring	AISI 304L	AISI 304L
14	cover plate	A 285 Gr C	A 316Ti
15	cover seal	pure graphite	pure graphite
16	hexagonal head screw	A2-70	A2-70
17	stuffing box	graphite plaiting	graphite plaiting
18	stuffing box	pure graphite	pure graphite
19	gland follower	AISI 316 (until DN300); A 216 WCB	AISI 316
20	tie rod	A2-70	A2-70
21	hexagonal nut	A2-70	A2-70
22	mounting flange	S355J0 galvanized	S355J0 galvanized
23	cylinder head screw	8.8	8.8
24	pin	V2A	V2A
25	plate	AISI 304L	AISI 304L
26	grooved drive stud	V2A	V2A

quadax® valves inc.
The quadax® 4-offset butterfly valve, a member of müller co-ax ag, entered the worldwide market in 2009 and expanded the company's product range into the area of butterfly valves. With this addition, the company's product range was extended to larger nominal diameters.

quadax® butterfly valves are suitable for the oil and gas industry, petrochemical industry, cryogenics and refineries, LNG + LPG, and many other applications.

With its unique quadruple (four) offset design, quadax® valves meet the most strict requirements for tightness, even under extreme temperature and pressure conditions while the required torque is lower compared to the leading standards.

Think global, act local
Our headquarters are located in Germany (Baden-Württemberg). But our products are used all over the world – wherever high pressures, extreme temperatures, uncompromising quality and stringent requirements go hand in hand.

Family company
We combine the values and flexibility of a family-owned company with a long-term perspective and the professionalism of a global player. These are only some of the many reasons to work with us.

We look forward to hearing from you!

quadax valves inc.
1518 Grundy's Lane
Bristol, PA 19007

Tel: 855-578-2329
Fax: 855-678-2329
sales@quadaxvalves.com
www.quadaxvalves.com

All technical information is up to date at the time of going to press. We reserve the right to make technical changes. Unfortunately, we cannot exclude the possibility that errors have been made. Please understand that no legal demands can be made derived from the information, images and descriptions. The texts, photos, technical drawings and any other form of representation are trademarked property of müller co-ax ag. Any further usage requires express permission from müller co-ax ag.

V01/2018_USA

Subject to modifications.
quadax is a registered trademark

quadax valves inc.

1518 Grundy's Lane
Fax: 855-678-2329

Bristol, PA 19007, USA
sales@quadaxvalves.com

Phone: 855-578-2329
www.quadaxvalves.com